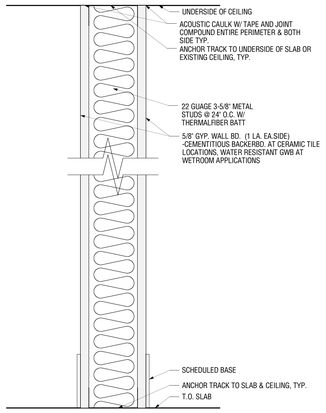

1 GWB PARTITION
Scale: 3" = 1'-0"

1A GWB PARTITION
Scale: 3" = 1'-0"
SAME AS WALL TYPE 1 BUT WITH GWB ONLY ON ONE SIDE

1B GWB PARTITION W 2-1/2" STUDS
Scale: 3" = 1'-0"
SAME AS TYPE 1 GWB PARTITION W/ 2-1/2" STUDS

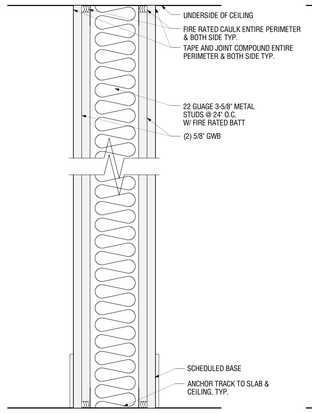

2 2HR FIRE RATED GWB PARTITION
Scale: 3" = 1'-0"
MEA 81-98-M
UL U419

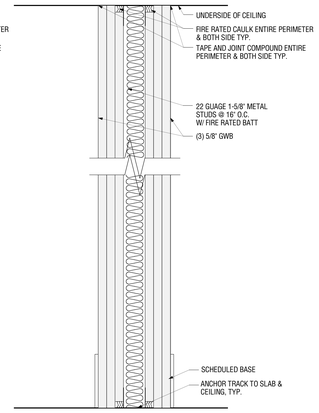

2A 3HR FIRE RATED GWB PARTITION
Scale: 3" = 1'-0"
MEA 81-98-M
UL U419

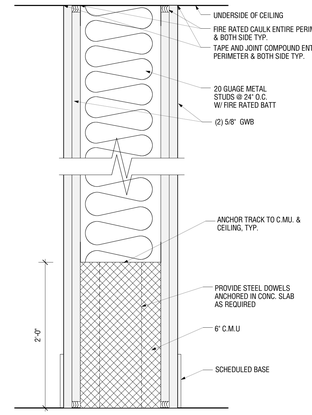

2B 2HR FIRE RATED GWB & CMU PARTITION
Scale: 3" = 1'-0"
BSA 301-60-SM

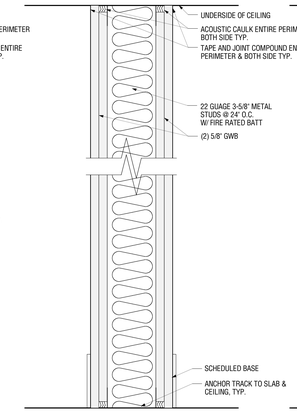

3 ACOUSTIC GWB PARTITION
Scale: 3" = 1'-0"

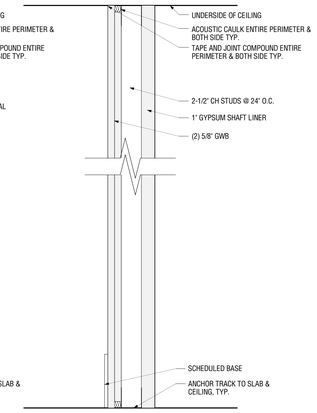

4 SHAFT WALL
Scale: 3" = 1'-0"
MEA M309-03-M
UL U415

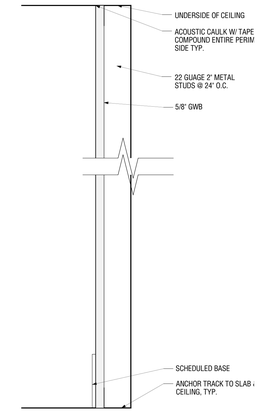

5 GWB FURRING W/ 2" STUDS
Scale: 3" = 1'-0"

5A GWB FURRING W/ 7/8" FURRING
Scale: 3" = 1'-0"
SAME AS WALL TYPE 5, WITH 7/8" FURRING, SHIM AS REQUIRED TO MAINTAIN PLUMB WALL.

5C GWB LAMINATED
Scale: 3" = 1'-0"
SAME AS WALL TYPE 5, WITH GWB LAMINATED TO MASONRY WALL W SHIM AS REQUIRED TO MAINTAIN PLUMB WALL.

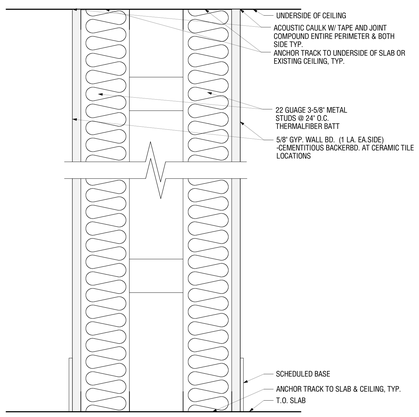

6 GWB PLUMBING CHASE
Scale: 3" = 1'-0"
CONTRACTOR TO COORDINATE PLUMBING OPENING REQUIRED.

7 NOT USED
Scale: 3" = 1'-0"

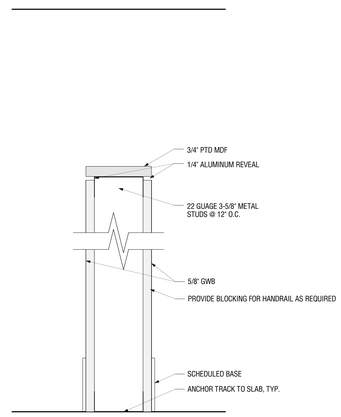

8 LOW WALL
Scale: 3" = 1'-0"
REFERNECE ELEVATION DRAWINGS FOR FINAL WALL HEIGHT

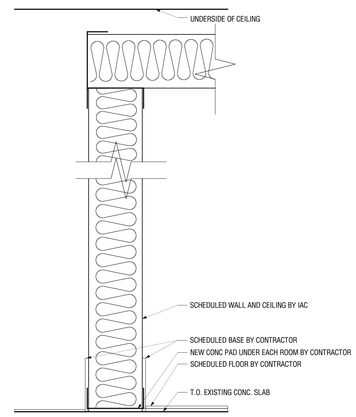

9 PREFAB ACOUSTIC ROOM PARTITION BY IAC
Scale: 3" = 1'-0"

NOTE:
1. PREFAB ACOUSTIC ROOMS AND PARTITIONS BOUGHT BY OWNER AND SUPPLIED BY IAC. CONTRACTOR TO COORDINATE INSTALLATION.
2. REFERENCE ELEVATIONS FOR CEILING HEIGHTS.
3. REFERENCE A-900, DETAILS 1, 2 & 3 FOR ADDITIONAL DETAILS.

GENERAL PARTITION NOTES:

1. ALL GWB TO BE MOLD RESISTANT DENSARMOR BY GEORGIA PACIFIC.

2. AT CERAMIC TILE LOCATIONS PROVIDE CEMENT BOARD.

3. PROVIDE STEEL PLATE BLOCKING WHERE REQUIRED.

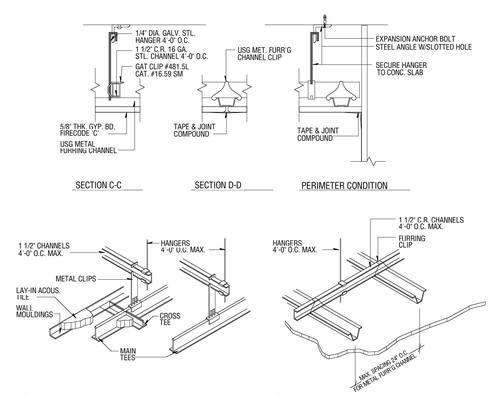

A TYP. LAY-IN ACT DETAIL
N.T.S.

B TYP. GWB CEILING DETAIL
N.T.S.

C NOT USED
N.T.S.

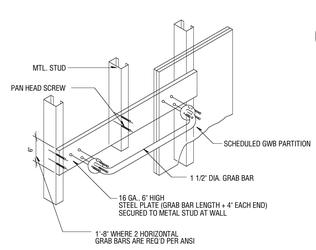

E TYP. DETAIL FOR GRAB BAR
N.T.S.

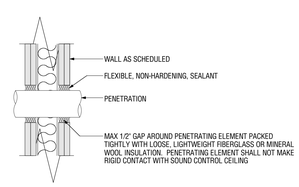

D TYP. ACOUSTIC PENETRATION
N.T.S.

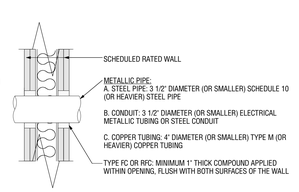

F TYP. 2HR FIRESTOP DETAIL UL W-L-1063
N.T.S.

DOB FILING DRAWINGS	**xx.xx.08**
BID DOCUMENTS	**1.22.08**
ISSUE	**DATE**

MEP ENGINEER:

STANISLAV SLUTSKY, P.E.
CONSULTING ENGINEER
139 FULTON STREET, SUITE 307
NEW YORK, NY 10038
Ph: 212.732.9300

STRUCTURAL ENGINEER:

ANTHONY GENNARO, P.E.
14 BEENA WAY
MANALAPAN, NJ 07726
Ph: 732.972.8496
Fx: 732.972.7562

PROJECT ARCHITECT:

BKSK ARCHITECTS, LLP
28 WEST 25 STREET
NEW YORK, NY 10010
Ph 212.807.9600
Fx 212.807.6405

PROJECT NAME:

CHURCH STREET SCHOOL FOR MUSIC AND ART
NEW YORK, NY 10007

DRAWING TITLE:

WALL, FLOOR & CEILING TYPES

FILE:
DATE:
SCALE:
PROJECT NO.: 0621

DRAWING NUMBER
A-700